3 Sheets—Sheet 1.

L. J. BENNETT.

Disintegrating Mill.

No. 211,316. **Patented Jan. 14, 1879.**

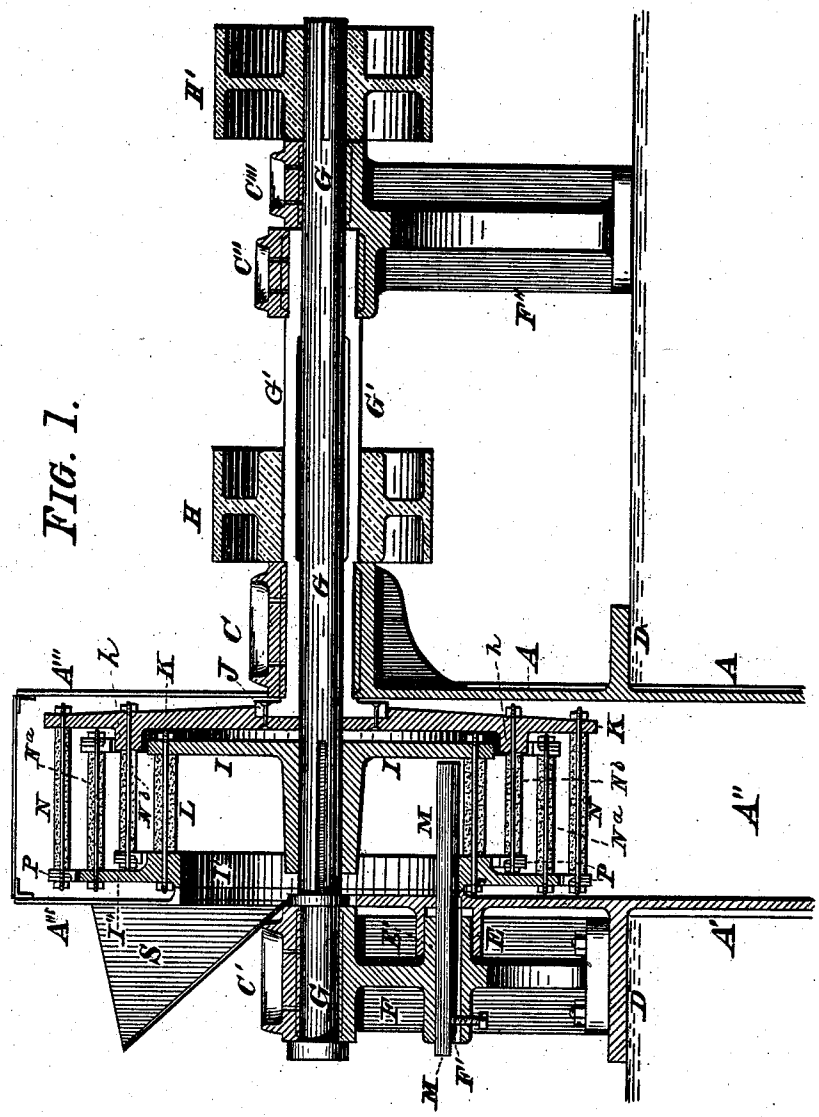

Witnesses:

Frank Hirsch

Chas. Bossart

Inventor:

L. J. Bennett,

by Michael J. Stark atty.

N. PETERS, PHOTO-LITHOGRAPHER, WASHINGTON, D. C.

L. J. BENNETT.

Disintegrating Mill.

No. 211,316. Patented Jan. 14, 1879.

FIG. 2.

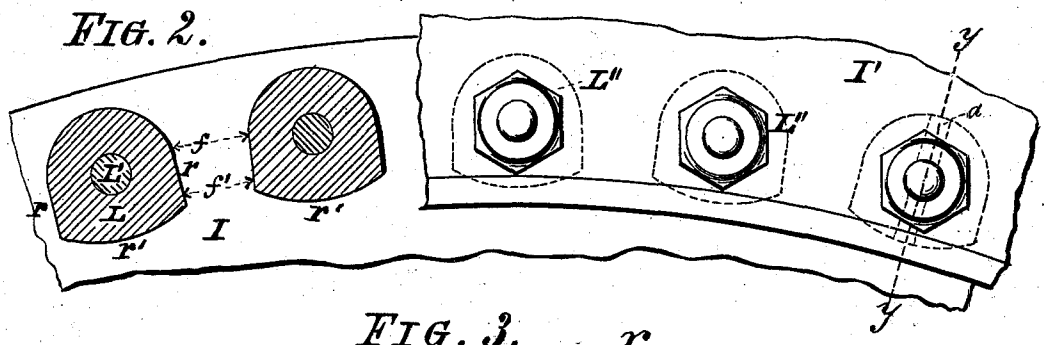

FIG. 3.

FIG. 5.

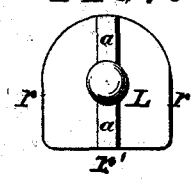

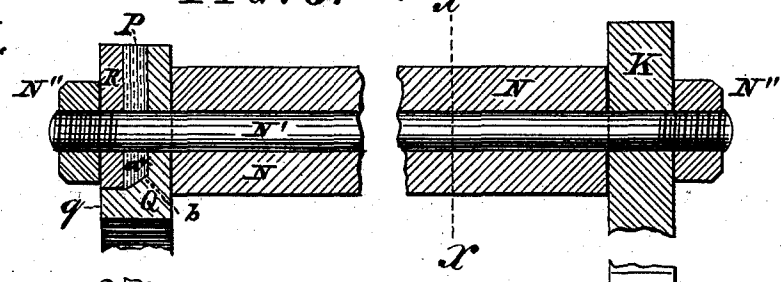

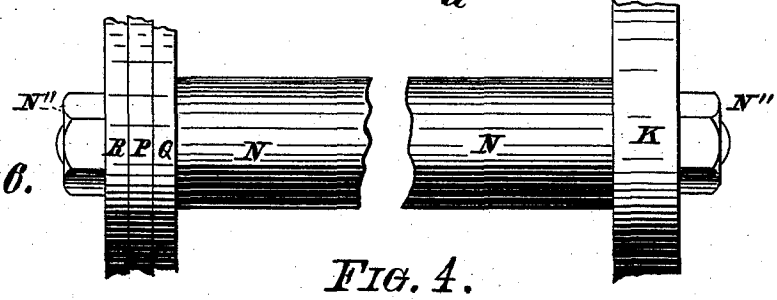

FIG. 6.

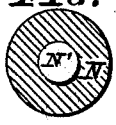

FIG. 4.

FIG. 7.

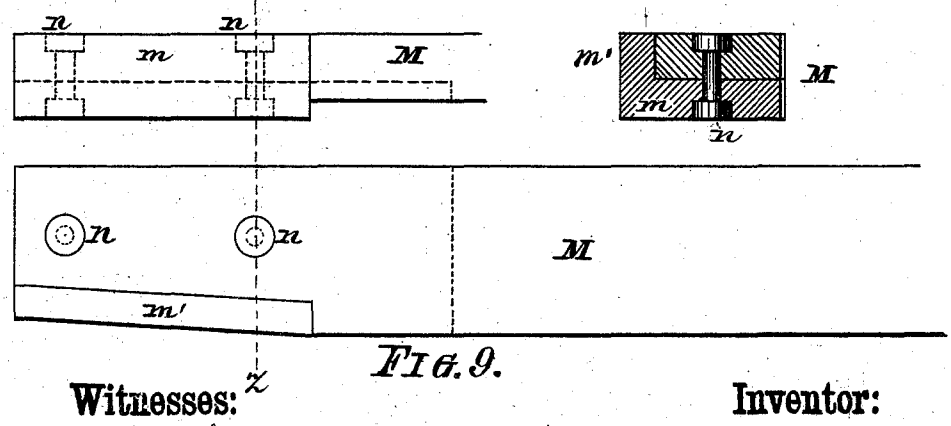

FIG. 8.

FIG. 9.

Witnesses:

Frank Hirsch

Chas. Barnard

Inventor:

L. J. Bennett,

by Michael J. Stark, atty.

N. PETERS, PHOTO-LITHOGRAPHER, WASHINGTON, D. C.

3 Sheets—Sheet 3.

L. J. BENNETT.

Disintegrating Mill.

No. 211,316. Patented Jan. 14, 1879.

FIG. 10.

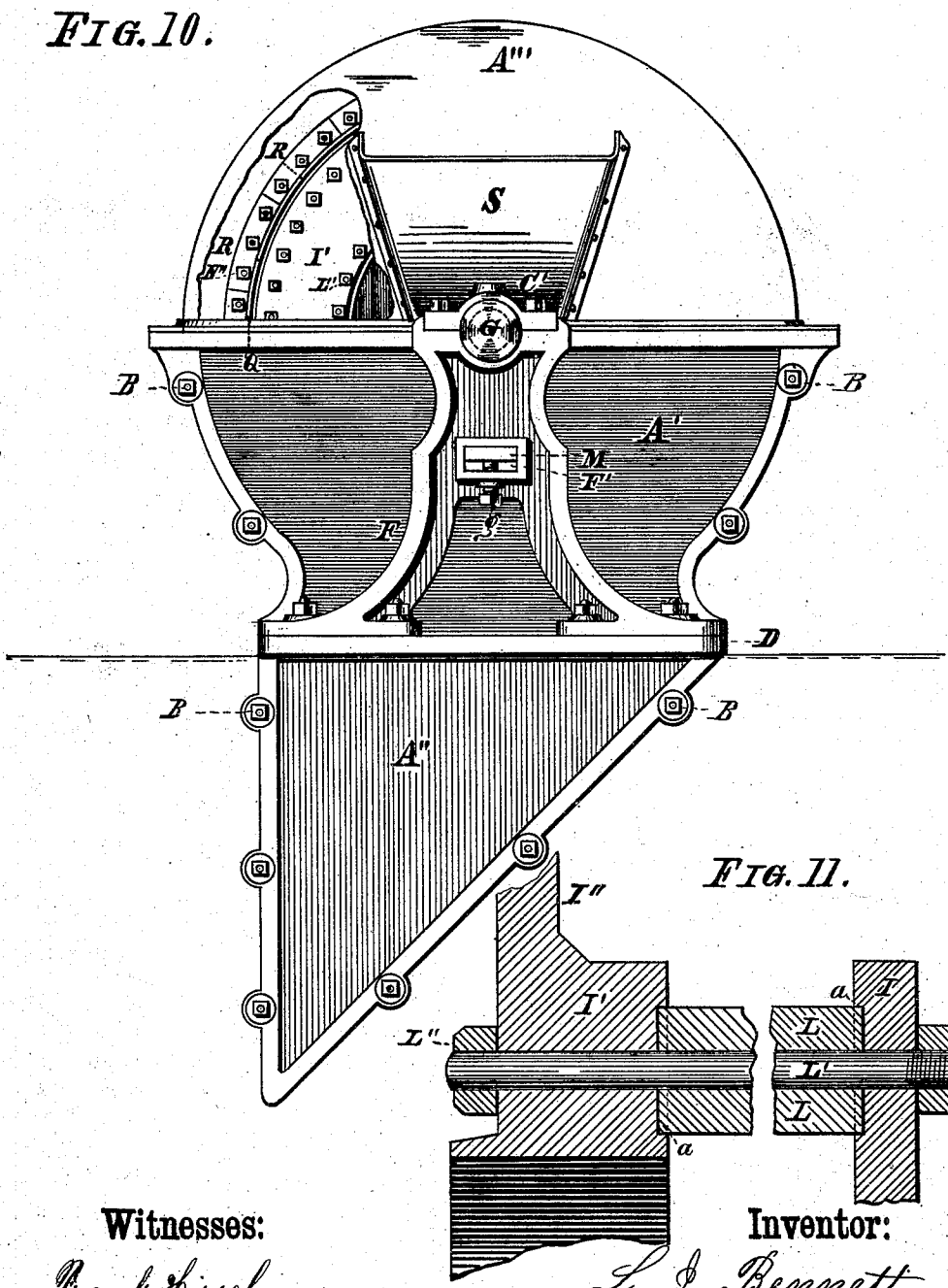

FIG. 11.

Witnesses:

Frank Hirsch

Chas. Bossart

Inventor:

L. J. Bennett,

by Michael J. Stark, atty

N. PETERS, PHOTO-LITHOGRAPHER, WASHINGTON, D. C.

UNITED STATES PATENT OFFICE.

LEWIS J. BENNETT, OF BUFFALO, NEW YORK.

IMPROVEMENT IN DISINTEGRATING-MILLS.

Specification forming part of Letters Patent No. **211,316**, dated January 14, 1879; application filed May 23, 1878.

To all whom it may concern:

Be it known that I, LEWIS J. BENNETT, of Buffalo, in the county of Erie and State of New York, have invented certain new and useful Improvements in a Disintegrating-Mill; and I do hereby declare that the following description of my said invention, taken in connection with the accompanying sheets of drawings, forms a full, clear, and exact specification, which will enable others skilled in the art to which it appertains to make and use the same.

This invention has special reference to disintegrating-mills for pulverizing cement, ore, and similar substances; and it consists in the peculiar arrangement of parts and details of construction, as hereinafter first fully set forth and described, and then pointed out in the claims. This mill is constructed with two metallic cages, revolving in opposite directions within a suitable casing; and the object of my said invention is to improve upon the durability of the said cages, which, by their present construction, are entirely worn out in about two weeks when used for grinding cement or similar hard substances.

Heretofore the pins and bars of the cages were constructed usually of wrought-iron, and in some extraordinary cases of English cast-steel. These bars were turned on both ends in a lathe, and then riveted into the disks and rings, which bars, when worn out, were removed by drilling the pins out of said rings and plates, and new ones substituted in their place.

The cost of a set of steel pins is exceedingly high, because every bar must be turned on both ends, and then riveted into the rings and plates, and their durability, as compared with iron rods, is not increased in proportion to their cost of production, they seldom lasting longer than about four weeks.

I have been heretofore disintegrating cement in a mill as heretofore described, with both iron and steel pins; but the expenses connected with the frequent removal and renewal of the pins and consequent stoppage of the mill during the time occupied by repairs were such as to render the same practically useless for this purpose. To avoid these obstacles and objections and to enhance the durability of the mill, and thereby to render the same practically economical, I construct my cages of bars of wrought-iron, and plate or jacket them with chilled metal, as hereinafter more particularly specified, whereby I produce a mill possessing the toughness of wrought-iron and the hardness of the hardest cast-steel, and wearing successfully for more than four months without the slightest repair and renewal of parts, which, being comparatively cheap, can be replaced at a trifling expense as compared with that heretofore required to renew a like number of parts of the old mill.

In the drawings heretofore mentioned, which serve to illustrate my invention more fully, Figure 1 is a longitudinal sectional elevation of my improved disintegrating-mill. Fig. 2 is an elevation of a fragment of one of the cages. Fig. 3 is a transverse section of a fragment of one of the cages, illustrating my method of plating the rods and rings. Fig. 4 is a plan of the part illustrated in Fig. 3. Fig. 5 is an end view of one of the rods. Fig. 6 is a sectional view of one of the round pins, the figure being taken in line *x x* of Fig. 3. Figs. 7, 8, and 9 are detail views of the breaker. Fig. 10 is a front elevation of the mill, parts being broken away to illustrate the interior arrangement. Fig. 11 is a sectional elevation in line *y y* of Fig. 2.

Like letters of reference indicate corresponding parts in all the figures.

A A′ are two metallic plates, constituting the lower half of the casing for the mill, in conjunction with a sheet-iron end plate of the usual construction, the sides being secured together by means of bolts B passing through both plates. The side A has on its upper edge a bearing, C, formed in one piece with said side, and near its middle part a flange, D, by means of which the said casing is secured in proper place upon suitably-constructed foundations. The side A′ has also a flange, D, but no bearing on its upper edge; and it is further provided with a socket-shaped projection, E, at a suitable distance above the flange D to admit a hollow projection, E′, of a standard, F, placed in front of the plate A′.

The standard F has a bearing, C′, on its upper extremity, carrying the front end of a solid shaft, G. Upon this shaft is fitted a hol-

low shaft, G′, extending to within a suitable distance of the end of the solid shaft G, and revolving, together with the latter, in a double bearing, C″ C‴, of an independent standard, F″, as clearly indicated in Fig. 1. Upon the extreme rear end of the solid shaft G is keyed a pulley, H′, and near the front end thereof, and within the casing A A′, a disk, I. The hollow shaft G′ is likewise fitted with a pulley, H, and it has on its front end, and within the casing A A′, a flange, J, to which is bolted or riveted a disk, K, both disks being in close proximity to each other and the rear side, A.

I is a metallic plate, serving as a means for attachment of a series of pins or rods, L, it being perforated near its perimeter for the passage of the bolts L′, as shown in detail in Fig. 11. The front end of these bolts L′ are fitted into an annular plate, I′, having a flange, I″, perforated near its perimeter, the same as the disk I, for the reception of the bolts of a series of rods, N^a.

The disk K has at a proper distance from its perimeter an annular rise or projection, *h*, having a series of apertures for the reception of the rods N^b. The ends of the rods N, N^a, and N^b are secured to wrought-iron rings P, of which the ones for the pins or rods N N^b are flush with the annular ring I″, while that one for the rods N^a is in close proximity to the disk K.

The cages are revolved in opposite directions by means of belts from any prime motor at a speed of from four hundred to four hundred and fifty revolutions per minute, and the substance to be disintegrated is admitted into the interior of the casing through the spout or hopper S, fixed to the cover A‴, where it is violently thrown against the various bars, so that after it has passed the outermost bars, N, it falls in a pulverized state into the chute A″, from whence it is removed by the usual elevator in any of the well-known manners.

To break up the lumps of the substance to be ground, use is made of a breaker, M, passed into the interior of the inner cage through the aperture F′ in the front standard, F, and rendered adjustable by the set-screws *g*, as plainly indicated in Figs. 1 and 10. The breaker M, as well as the pins L N and rings P, are subjected to very severe and rough usage, owing to the peculiar manner in which the disintegration is effected, and they are consequently very rapidly worn away by the hard substances with which they are in constant contact.

As heretofore stated, iron pins or rods will last no longer than two weeks on cement and similar hard substances, while the steel pins are entirely abraded in about four weeks. To avoid this I construct my pins of wrought-iron rods L′ N′, screw-threaded on both extremities to admit the nuts L″ N″, respectively, and surround them with chilled-metal tubes of either cast-iron or steel. Such a chilled tube I have found to last at least four months, and may at any time be readily removed from the rods L′ N′ and replaced when worn at a trifling expense, and without disturbing the rest of the pins.

The pins N are circular in cross-section, so as to enable me to change their position in case they are worn on one side or the other, as shown in Fig. 6; but the pins L, Figs. 2, 5, and 11, are oblong, having two flat and parallel, or nearly parallel, sides, *r r*, Fig. 5, and one of the other sides, *r′*, curved. These pins being set into a circle the sides of the adjacent pins converge, thereby producing interstices between the pins that are narrower at *f′*, Fig. 2, than at *f*, the narrower part being that from which the substance to be disintegrated gains admission. This is a very important feature in my mill, because it will cause the substance to be disintegrated, and which is not yet sufficiently reduced in size to be deflected, while the arrangement of the tapering space between the pins or rounds prevents the packing of the material in the interstices which, with the present construction of the pins, frequently takes place, and renders stoppage and cleaning necessary. To enable me to set these pins correctly, I construct them with end projections *a*, Figs. 5 and 11, fitting correspondingly-shaped notches or depressions in the disks I and I′, so that when interposed between the disks they will remain in their proper position.

The concentric rings P, I prefer to construct of wrought-iron, owing to its ductility and toughness; but since they will, when left unprotected, rapidly wear away, I cover them with plates Q R, Figs. 3 and 4, said plates being cast in chills, and therefore as hard as metal can be made. These plates I form in sections of proper length, and provide them with apertures for the passage of the rods N′, by means of which they are secured to the rings P. The plates Q have projecting ledges *q*, to protect the inner edges of the said rings P, and the plates R are placed on the outer surface of these rings, the laps of the plates Q R being made to alternate, as shown in Fig. 10, so as to add to the strength of the rings while protecting them. The inner edge of these rings P is beveled at a^x, and the ledge *q*, at its junction with the plate Q, beveled accordingly, whereby, by drawing the nuts N″, Fig. 3, the ring P is caused to expand, and thereby stiffened, giving superior rigidity over rings otherwise constructed.

To protect the breaker M, I provide the same with a plate or shoe, *m*, Figs. 7, 8, and 9, having a projecting ledge, *m′*, whereby one edge and the bottom side of this breaker is protected, the said shoe being also cast in a chill, and riveted to the wrought-iron bar M by the rivets or screw-bolts *n*.

It will be readily observed that, by constructing the pins of rods and tubes, I can at any time remove any one or more of them without disturbing the balance of the mill, so

that repairs can be made on my mill in less time and at less cost than any other mill with which I am acquainted.

By reference to Fig. 1 it will be seen that the space between the opposite plates I I′ and K and I′ is gradually increasing, so as to readily permit the stuff to pass from one to the other cage, or from one set of pins to the other, without working between the end rings thereof. To enhance the durability of the nuts L″ and N″, I shall case-harden them or construct them of cast-steel properly hardened.

Having thus fully described my invention, I claim as new and desire to secure to me by Letters Patent of the United States—

1. The pin or rod for disintegrating-mills hereinbefore described, having the two parallel sides *r r* and the curved side *r′*, as stated, whereby the matter to be disintegrated is deflected, when not sufficiently reduced in size, by the curved side *r′*, and allowed to pass without "packing" after reduction by the converging sides *r r*, as and for the object specified.

2. In a disintegrating-mill consisting of cages composed of disks, rings, and rounds, a pin or round having the nutted bolt N′ passed through said round, the disk, and the ring, whereby the rounds may be separately removed and reinserted and the wearing-surfaces changed, substantially as and for the object specified.

3. The combination, with the round or pin L, having the end projections *a*, of the disk I and annular ring I′, both having transverse grooves for the reception of said projections *a*, as and for the object specified.

4. The combination, with the rings P, of the chilled plates Q, having the ledges *q*, and the plates R, seated upon said ledges on the other side of the ring P, whereby the sides and lower edges of the ring are completely covered, substantially as and for the use and purpose indicated.

5. In a disintegrating-mill consisting, essentially, of cages revolving in opposite directions, the combination, with the disks and rings of such cages, of pins or rounds, constructed as described, to be separately removed and reinserted without disturbing the rest of said rounds, as and for the object specified.

6. The combination, with the ring P, having the inner edge beveled at $a^{\times}$, of the plates Q, having the ledge *q* and the beveled part *b*, plate R, and bolt N′, as and for the object specified.

7. The combination, with the front plate, A′, having the projection E, of the standard F, provided with the projection E′, entering said projection E, as stated.

8. The combination, with the front plate, A′, having the hollow projection E, of the standard F, provided with the bearing C′ and hollow projection E′, and the breaker M, passed through the aperture F′ in said standard, and secured by the bolts *g*, as specified.

In testimony that I claim the foregoing as my invention I have hereto set my hand and affixed my seal in the presence of two subscribing witnesses.

LEWIS J. BENNETT. [L. S.]

Attest:
MICHAEL J. STARK,
ANDREW SPALDING.